Seat No./Enrollment No.: _____

GUJARAT TECHNOLOGICAL UNIVERSITY
BACHELOR OF ENGINEERING – SEMESTER 3 – EXAMINATION – SUMMER 2026

Subject Code: 3130608 **Date: 24/06/2026**

Subject Name: Mechanics of Solids

Time: 02:30 PM TO 05:00 PM **Total Marks: 70**

Instructions:

1. **Attempt all questions.**
2. **Make suitable assumptions wherever necessary.**
3. **Figures to the right indicate full marks.**
4. **Simple and non-programmable scientific calculators are allowed.**

Q.1	**(a)**	Explain : (i) Type of beams (ii) Type of loading on the beams.	**03**
	(b)	Derive the relation, with usual notations, among loading, shear force and bending moment at a section for a determinate beam.	**04**
	(c)	Explain :(i) Principle of transmissibility, (ii) Principle of superposition (iii)Law of parallelogram of forces	**07**
Q.2	**(a)**	Explain in brief Coplanar concurrent and non-concurrent force system.	**03**
	(b)	Define Point of contra flexure, point & magnitude of maximum bending moment, maximum shear force	**04**
	(c)	Enlist Assumptions and derive equation of bending.	**07**
		OR	
Q.2	**(c)**	Calculate support reactions for the simply supported beam carrying point load W kN at the center of the span .Also plot Bending Moment and Shear Force diagrams showing values.	**07**
Q.3	**(a)**	State and explain the Law of polygon of forces.	**03**
	(b)	From first principle obtain the location of center of gravity of semi-circular lamina.	**04**
	(c)	Derive equation of torsion.	**07**
		OR	
Q.3	**(a)**	Define principal stresses and principal planes .	**03**
	(b)	Define:(i) Modulus of elasticity, (ii) Poisson's ratio, (iii) Modulus of rigidity (iv) bulk modulus	**04**
	(c)	Explain Mohr's circle of stress,	**07**
Q.4	**(a)**	State and explain The Lami's theorem.	**03**
	(b)	State and explain Pappus – Guldinus first and second theorems.	**04**
	(c)	Define following : i. Moment of inertia of a section, ii. Polar moment of inertia, iii. Radius of gyration iv. Section Modulus	**07**
		OR	
Q.4	**(a)**	Using first principle, obtain the distance of centroid of a right-angled triangular lamina from the base.	**03**
	(b)	State and explain Varignon's principal of moments.	**04**

(c) A simply supported beam of span 4.0 m having uniform section of size 200 mm width and 400 mm depth is loaded with uniformly distributed load of 40 kN/m over entire span. Determine the maximum bending moment along the span and draw the bending stress distribution across the section. **07**

Q.5 **(a)** State and explain Hook's law. **03**

(b) Explain Mohr's circle method with neat sketch for a section subjected to direct stresses along two perpendicular directions. **04**

(c) A solid shaft of 250 mm diameter has the same cross-sectional area as that of hollow shaft of the same material of inside diameter 200 mm. Find the ratio of power transmitted by the two shafts at same angular velocity. Also, compare angle of twist in equal lengths of these shafts when stressed to the same intensity. **07**

OR

Q.5 **(a)** Write assumption made in the theory of torsion. **03**

(b) A cantilever beam 2 m long has rectangular section 200 mm x 500 mm. Find out point load at free end of beam if permissible bending stress is $20N/mm^2$. **04**

(c) Determine moment of inertia of rectangular section with dimension b x d in mm, **07**

*****

Enrolment No./Seat No_____

GUJARAT TECHNOLOGICAL UNIVERSITY

BE - SEMESTER–III EXAMINATION – SUMMER 2025

Subject Code:3130608 Date:04-06-2025

Subject Name:Mechanics of Solids

Time:02:30 PM TO 05:00 PM Total Marks:70

Instructions:

1. **Attempt all questions.**
2. **Make suitable assumptions wherever necessary.**
3. **Figures to the right indicate full marks.**
4. **Simple and non-programmable scientific calculators are allowed.**

			MARKS
Q.1	**(a)**	Define : (i) Space (ii) Resultant (iii) Couple	**03**
	(b)	Determine resultant of coplanar concurrent force system shown in fig.1	**04**
	(c)	Find support reactions for the beam shown in fig.2	**07**
Q.2	**(a)**	Enlist Fundamental principles of mechanics. State principle of transmissibility.	**03**
	(b)	A cord supported at A and B carries a load of 10 kN at D and a load of W at C as shown in Fig.3. Find the value of W so that CD remains horizontal.	**04**
	(c)	Analyse the truss shown in fig. 4	**07**
		OR	
	(c)	For the system of force on a lamina OABC shown in figure 5, find magnitude and direction of the resultant force. Also locate the resultant by perpendicular distance from point "O".	**07**
Q.3	**(a)**	Determine resultant of coplanar concurrent force system shown in fig.1 using graphical method.	**03**
	(b)	Derive relation between uniformly distributed load, shear force and bending moment with usual notations.	**04**
	(c)	Draw shear force and bending moment diagrams for the beam shown in fig. 6	**07**
		OR	
Q.3	**(a)**	Define (i) Shear force (ii) Point of zero shear (iii) Point of contraflexure	**03**
	(b)	State assumption made in theory of pure bending.	**04**
	(c)	Find centroid of lamina shown in fig. 7	**07**
Q.4	**(a)**	State and explain Pappus Guldinus first theorem using appropriate example.	**03**
	(b)	A rectangular beam 300 mm deep is simply supported over a span of 4.0 m. What uniformly distributed load the beam may carry if the bending stress is not to exceed 120 MPa? Take I = 8 x 10^6 mm^4	**04**
	(c)	Calculate stresses in each portion and the total change in length for steel bar ABCD as shown in figure 8. Take E = 200 GPa	**07**
		OR	
Q.4	**(a)**	Define : (i) Shear Stress (ii) Modulus of Rigidity (iii) Volumetric strain	**03**
	(b)	Determine moment of inertia about its horizontal centroidal axis for T section having flange and web dimensions 100mm x20 mm each.	**04**
	(c)	A short concrete column 300mm x 300mm in section is carrying axial load of 360 kN. The column is reinforced by four 12mm diameter steel bars each one at corner. Calculate stresses in concrete and steel.	**07**

Take Ec = 14GPa and Es = 210Gpa.

Q.5 **(a)** Sketch qualitative shear stress distribution diagrams for following sections **03**
(i) Circular (ii) I section and (iii) T section

(b) A steel tube of 2 m length is subjected to 50° C rise in temperature. Determine **04**
(i) free natural expansion and (ii) stress developed in the tube, if expansion is prevented. Take Es = 2.0 x 10^5 N/mm^2 and α = 12 x 10^{-6} per ° C.

(c) Define: (i) Poisson's ratio (ii) Bulk modulus (iii) Modulus of Elasticity. **07**
Derive relation between bulk modulus, Poisson's ratio and modulus of elasticity.

OR

Q.5 **(a)** Define (i) Torsional Rigidity (ii) Principal Plane (iii) Neutral axis **03**

(b) A solid steel shaft of 60 mm diameter is subjected to torque of 5 kNm. **04**
Determine maximum shear stress developed in the shaft. G= 80GPa

(c) For an element shown in fig.9. **07**
Determine (i) Principal stresses and location of corresponding principal planes.
(ii) Maximum shear stress and location of planes containing it

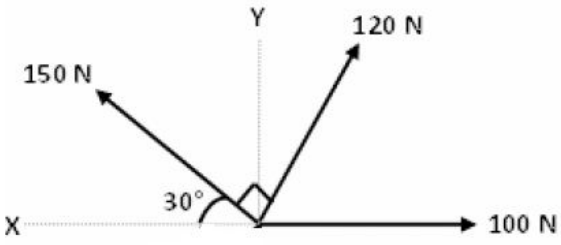

Fig. 1

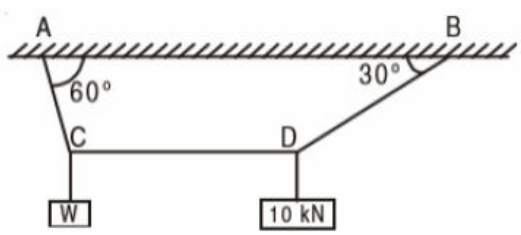

Fig. 3

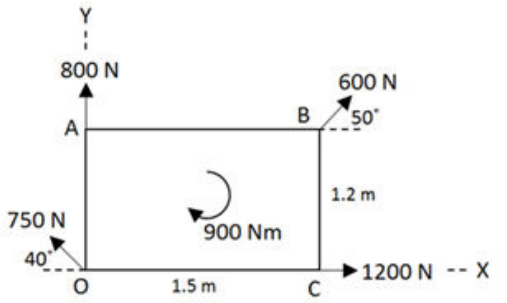

Fig. 5

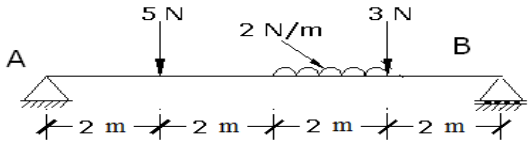

Fig. 2

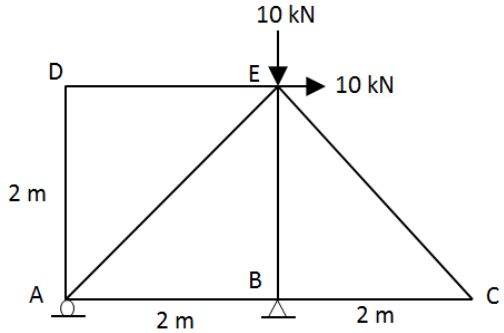

Fig. 4

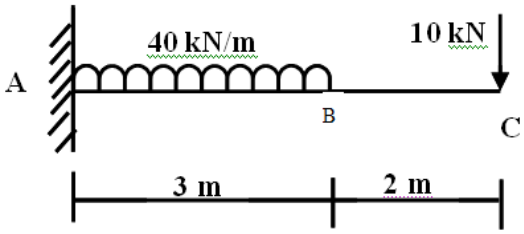

Fig.6

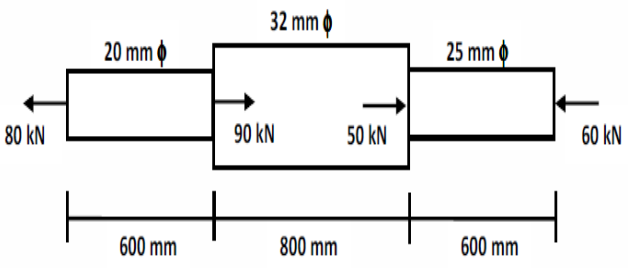

Fig. 8

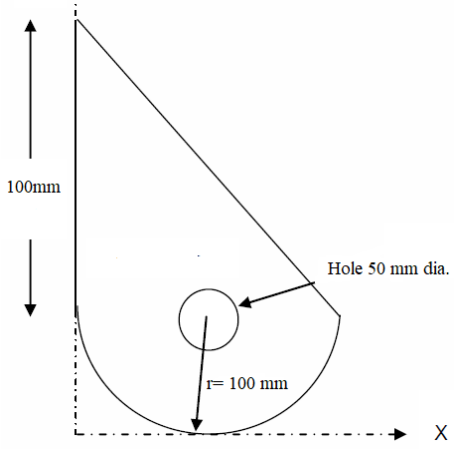

Fig. 7

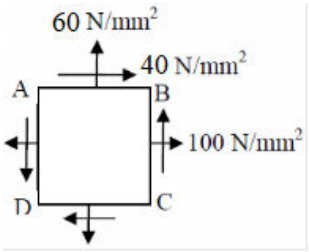

Fig. 9

****

Enrolment No./Seat No_____

GUJARAT TECHNOLOGICAL UNIVERSITY

BE - SEMESTER–III (NEW) EXAMINATION – SUMMER 2024

Subject Code:3130608 **Date:04-07-2024**

Subject Name: Mechanics of Solids

Time:10:30 AM TO 01:00 PM **Total Marks:70**

Instructions:

1. **Attempt all questions.**
2. **Make suitable assumptions wherever necessary.**
3. **Figures to the right indicate full marks.**
4. **Simple and non-programmable scientific calculators are allowed.**

			Marks
Q.1	**(a)**	Write the assumptions made in the analysis of plane trusses.	**03**
	(b)	State following Principles (i) Principle of superposition (ii) Principle of Transmissibility	**04**
	(c)	Calculate the magnitude and direction of the resultant of a concurrent force system shown in **Figure-1**. Use analytical method.	**07**

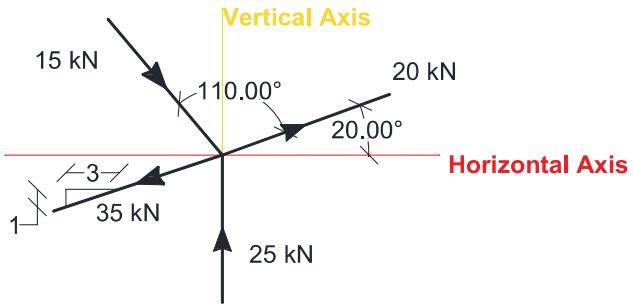

Figure-1

Q.2	**(a)**	Write down the characteristics of a couple.	**03**
	(b)	Calculate the Bending Stress at a section 2m from the left support for the beam shown in **Figure-2**. Beam cross section is 300 mm × 600 mm deep and the modulus of elasticity is 25000 MPa.	**04**
	(c)	Analyze the beam shown in **Figure-2**. Plot Bending Moment Diagram. Also, calculate maximum Bending Moment in the beam.	**07**

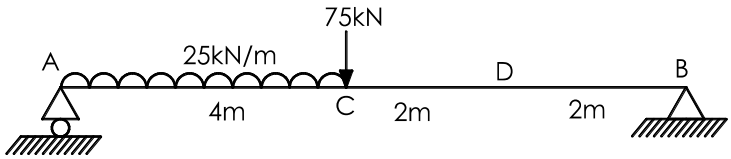

Figure-2

OR

	(c)	Analyze the beam shown in **Figure-2**. Plot Shear Force Diagram. Also, locate the point of maximum Bending Moment.	**07**

Q.3	**(a)**	Write assumptions made in the derivation of torsion equation.	**03**
	(b)	Using first principle, obtain the distance of centroid of a right-angled triangular lamina from the base.	**04**
	(c)	With usual notations, derive the formula for calculating Shear stress at a section in beams. Also, draw qualitative shear stress distribution across the section for an I-Section.	**07**

OR

Q.3 **(a)** State the Pappus-Guldinus Theorem-1 and Theorem-2. **03**

(b) Derive the torsion equation with usual notations for the circular solid shaft subjected to pure torsion. **04**

(c) Calculate the Shear Stress at a section 2m from the left support for the beam shown in **Figure-2**. Beam cross section is 300 mm × 600 mm deep and the modulus of elasticity is 25000 MPa. **07**

Q.4 **(a)** State following theorems **03**

(i) Parallel axes theorem

(ii) Perpendicular axes theorem

(b) For the two-dimensional system, a section is subjected to direct tensile stresses of σ_x and σ_y along two perpendicular directions. Derive the equation to obtain principal stresses. **04**

(c) Locate the centroid of the cross section with semicircular hole shown in **Figure-3**. **07**

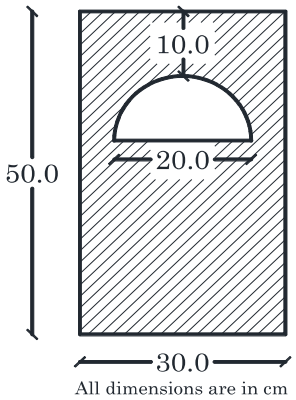

Figure-3

OR

Q.4 **(a)** Derive the equation to obtain moment of inertia of rectangular section about stronger axis of bending. **03**

(b) For the two-dimensional system, a section is subjected to direct tensile stresses of σ_x and σ_x along two perpendicular directions. Explain the step by step process of Mohr's circle method to obtain direct and tangential stresses on an inclined plane. **04**

(c) Obtain moment of inertia about centroidal x-axis for the section shown in **Figure-3**. **07**

Q.5 **(a)** Derive the relation among modulus of elasticity, modulus of rigidity and Poisson's ratio with usual notations. **03**

(b) A wire is tied straight between two rigid poles 10m apart has initial tensile stress $10N/mm^2$ at 32° C. Calculate stress in wire if temperature reduces to 27° C. Take modulus of elasticity $(E)=2.1\times10^5 N/mm^2$ and the coefficient of thermal expansion $(\alpha)=20\times10^{-6}/°C$. **04**

(c) A point in two-dimensional stressed body is shown in **Figure-4**. Determine the magnitudes and directions of principal stresses, using analytical method. **07**

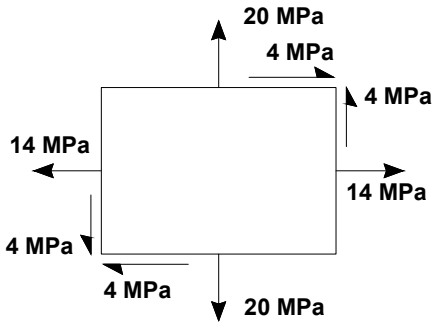

Figure-4

OR

Q.5 **(a)** A copper rod of 150mm diameter and 5m length is subjected to an axial pull of 500kN. Calculate stress and change in length of bar, if the modulus of elasticity E=100000N/mm^2. **03**

(b) Derive the relation among modulus of elasticity, Bulk Modulus and Poisson's ratio with usual notations. **04**

(c) A member is formed by connecting end to end a 200mm long steel bar of 50mm × 50mm square section with 500 mm long aluminum bar of 100mm × 100mm square section as shown in **Figure-5**. Determine the total change in length of the member, if the member carries an axial tensile load of 1000kN. Also calculate stress in each part of the member. Take E_{Steel} = 2×10^5 MPa and $E_{Aluminum}$=1×10^5 MPa. **07**

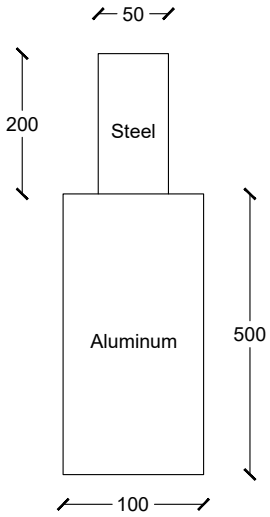

Figure-5

****

Seat No.: _____ Enrolment No._____

GUJARAT TECHNOLOGICAL UNIVERSITY

BE - SEMESTER–III(NEW) EXAMINATION – SUMMER 2023

Subject Code:3130608 Date:03-08-2023

Subject Name:Mechanics of Solids

Time:02:30 PM TO 05:00 PM Total Marks:70

Instructions:

1. **Attempt all questions.**
2. **Make suitable assumptions wherever necessary.**
3. **Figures to the right indicate full marks.**
4. **Simple and non-programmable scientific calculators are allowed.**

			Marks
Q.1	**(a)**	Explain free body diagram with neat sketch.	**03**
	(b)	Write various systems of forces and explain coplanar concurrent force system.	**04**
	(c)	Determine magnitude and direction of resultant force of the force system shown in **Fig.-1.**	**07**
Q.2	**(a)**	Write the assumption made in analysis of truss.	**03**
	(b)	Define shear force and bending moment with sign conventions.	**04**
	(c)	Determine magnitude, direction and position of resultant force of the force system given in **Fig.-2** with reference to point A.	**07**
		OR	
	(c)	Draw shear force and bending moment diagram for the beam shown in **Fig.-3.**	**07**
Q.3	**(a)**	Differentiate in-between centre of gravity & centroid.	**03**
	(b)	Write equation of moment of inertia for rectangular section and triangular section about its neutral axis and base of section.	**04**
	(c)	Determine the centroid of the plane area shown in **Fig.-4.**	**07**
		OR	
Q.3	**(a)**	Write assumption made in the theory of torsion.	**03**
	(b)	Find out radius of gyration for square section. Consider side dimension is **'B'** mm.	**04**
	(c)	Find the moment of inertia about both centroidal axes of Z section as shown in **Fig.-5.**	**07**
Q.4	**(a)**	Write assumptions made in theory of pure bending.	**03**
	(b)	Draw shear stress distribution diagram for hollow rectangular, hollow circle and H section.	**04**
	(c)	Calculate the diameter of the shaft required to transmit 45 kW at 120 rpm. The maximum torque is likely to exceed the mean by 30% for a maximum permissible shear stress of 55 N/mm^2. Calculate also the angle of twist for a length of 2 m. G = 80x 10^3 N/mm^2.	**07**
		OR	
Q.4	**(a)**	Define composite beam and give main objectives of it.	**03**
	(b)	A simply supported beam 300 mm x 600 mm of 6 m. span is subjected to UDL of 15 kN/m throughout the span. Find the maximum bending stress in the beam.	**04**
	(c)	Determine the shear stress at the junction of the flange & web of an **'I'** section as shown in **Fig.-6.** Consider shear force 20 kN.	**07**
Q.5	**(a)**	Define with sketch (i) tensile stress (ii) compressive stress (iii) shear stress	**03**

(b) State Hook's low. Explain stress-strain behavior of mild steel with sketch. **04**

(c) Determine the magnitudes & directions of principal stresses for two dimensional body as shown in **Fig.-7.** **07**

OR

Q.5 **(a)** Explain deformation of uniform bar section under self weight. **03**

(b) Determine change in volume of a steel bar of 100 mm dia. and 500 mm length, when it is subjected to axial pull of 50 kN. Take Es = 200 GPa. & poission ratio 0.25. **04**

(c) Calculate change in volume of a rectangular block 525 mm x 230 mm x 115 mm is subjected to load as shown in **Fig.-8.** Consider poission ratio 0.25 and E is 2 x 10^5 N/mm^2. **07**

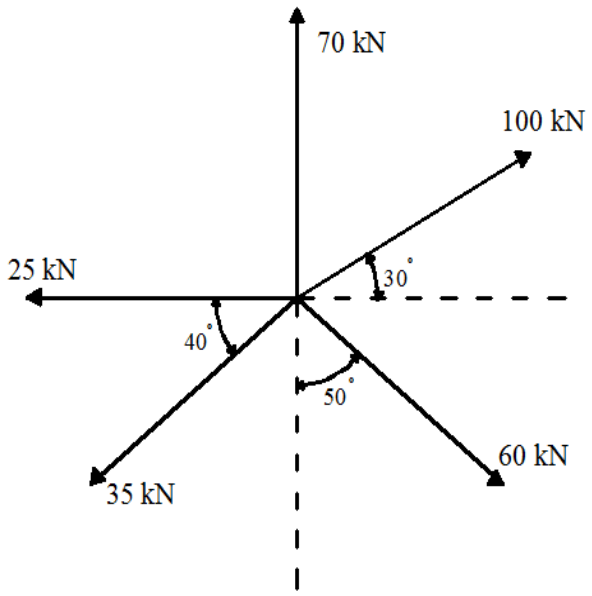

Fig. - 1

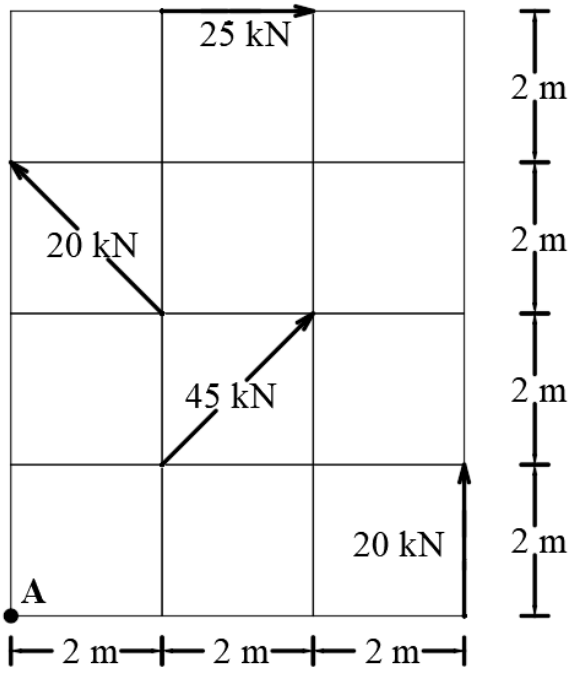

Fig. - 2

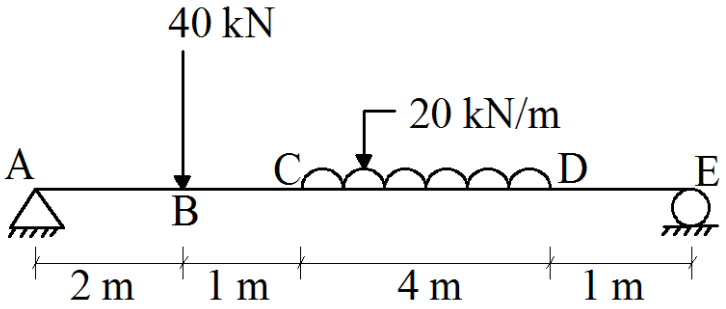

Fig. - 3

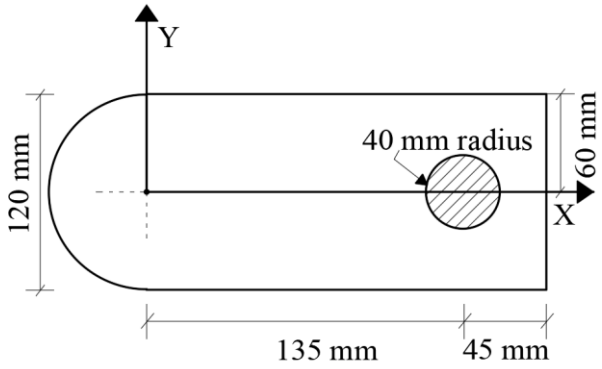

Fig. - 4

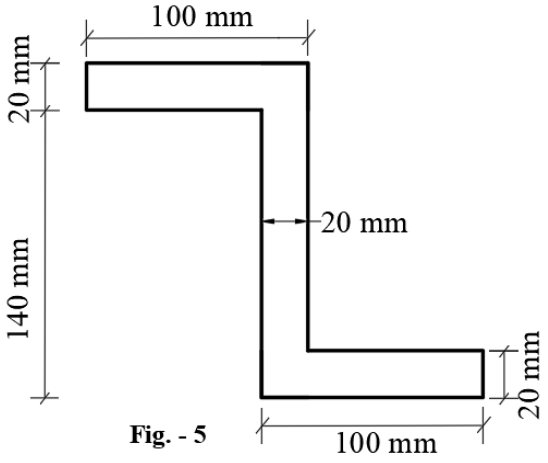

Fig. - 5

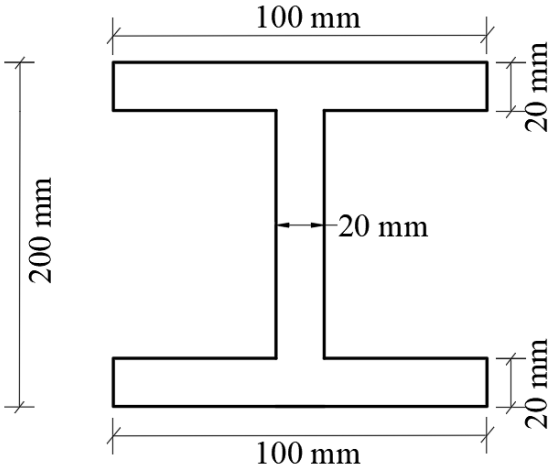

Fig. - 6

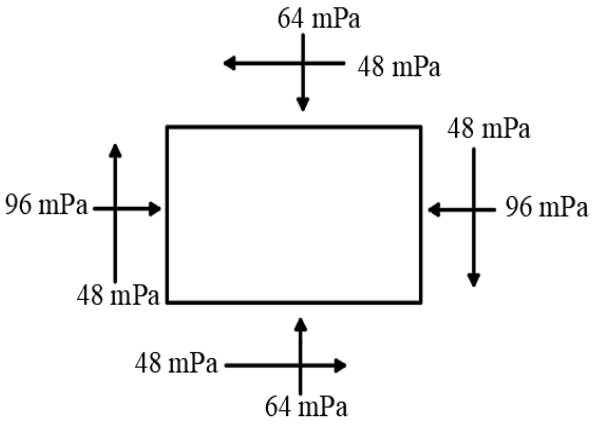

Fig. - 7

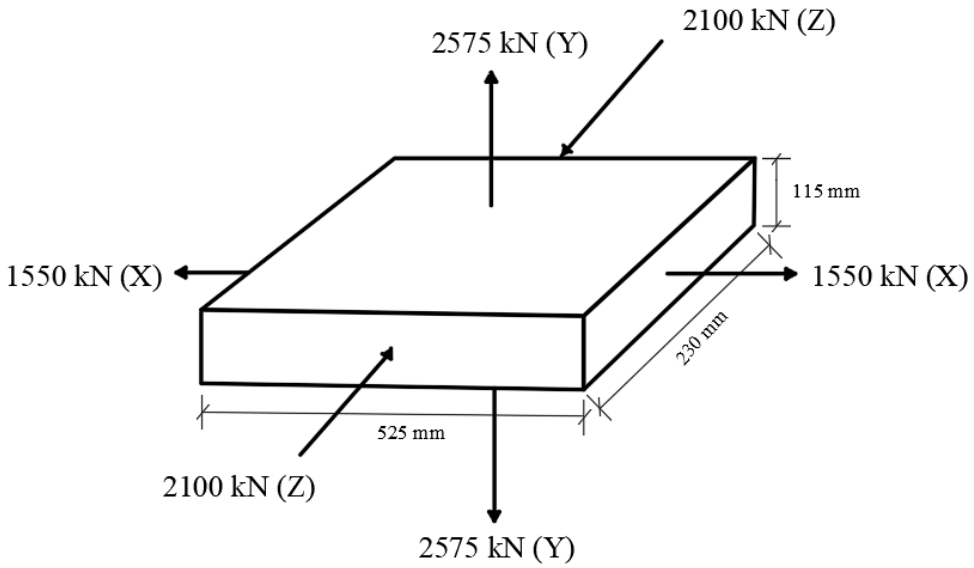

Fig. - 8

Seat No.: _____ Enrolment No._____

GUJARAT TECHNOLOGICAL UNIVERSITY

BE - SEMESTER– III (NEW) EXAMINATION – SUMMER 2022

Subject Code:3130608 Date:20-07-2022

Subject Name:Mechanics of Solids

Time:02:30 PM TO 05:00 PM Total Marks:70

Instructions:

1. **Attempt all questions.**
2. **Make suitable assumptions wherever necessary.**
3. **Figures to the right indicate full marks.**
4. **Simple and non-programmable scientific calculators are allowed.**

			Marks
Q.1	**(a)**	Define: (1) Rigid Body (2) Newton's second law (3) Law of Transmissibility.	**03**
	(b)	State and explain parallelogram law of forces.	**04**
	(c)	The following forces act at a point: (1) 20 N inclined at 30° towards North of East, (2) 25 N towards North, (3) 30 N towards North West, (4) 35 N inclined at 40° towards South of West. Find magnitude and direction of the resultant force.	**07**
Q.2	**(a)**	Differentiate between Moment and Couple.	**03**
	(b)	State and explain Lami's theorem.	**04**
	(c)	Find the moment of inertia of a plate with a circular hole about its centroidal x axis as shown in figure below.	**07**

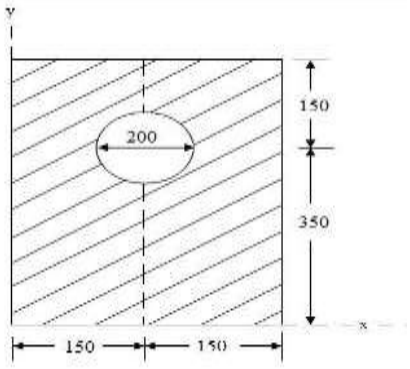

OR

	(c)	Find the position of the centroid of I-section as shown in Figure.	**07**

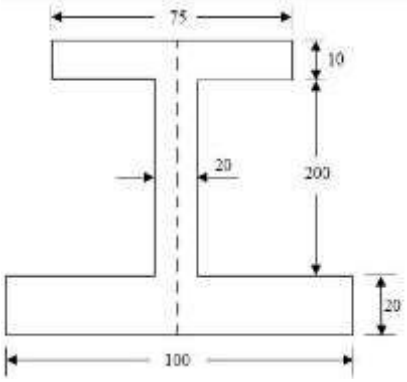

Q.3 **(a)** Explain: (1) Types of beams (2) Types of reactions. **03**

(b) State Hook's law. Draw stress strain curve for MS specimen and explain each point in detail. **04**

(c) Determine the support reactions for the beam shown below. Also plot SF and BM diagrams. **07**

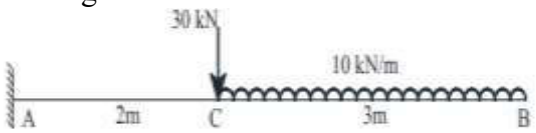

OR

Q.3 **(a)** Define stress. Also explain types of stresses. **03**

(b) Determine support reaction for the given beam shown in figure below. **04**

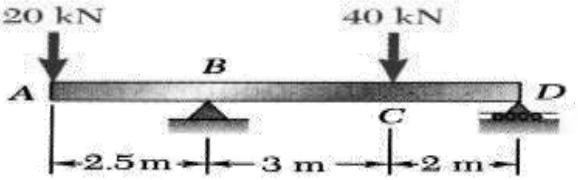

(c) For above figure draw SF and BM diagram with calculation. **07**

Q.4 **(a)** Discuss critically the assumption made in theory of Pure Bending. **03**

(b) State and explain Verignon's principle. **04**

(c) A reinforced concrete column is applied 700 kN load. Size of column is 250mm X 450mm, and it is reinforced with 6 bars of 20mm dia. Determine load taken by column and steel. **07**

OR

Q.4 **(a)** What is difference between deficient truss and Redundant truss. **03**

(b) Derive the formula for the elongation of a rectangular bar under the action of axial load. **04**

(c) Determine the centroid of the section shown in Figure below. **07**

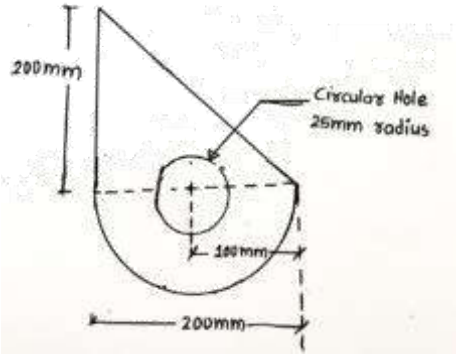

Q.5 **(a)** State parallel axes and perpendicular axes theorems. **03**

(b) Derive torsion equation with usual notations. **04**

(c) Draw the mohr's stress circle for direct stresses of 70 MN/m^2 (tensile) and 40 MN/m^2 (compressive) and estimate the magnitude and direction of the resultant stresses and planes making angles of 30° and 70° with the plane of the first principal stress. Find also the normal and tangential stresses on these planes. **07**

OR

Q.5 **(a)** Describe the Mohr's circle method to calculate principal stresses. **03**

(b) Derive assumption made in analysis of truss. **04**

(c) Determine the forces in the members DE, BE and AB of the truss, shown in figure below. **07**

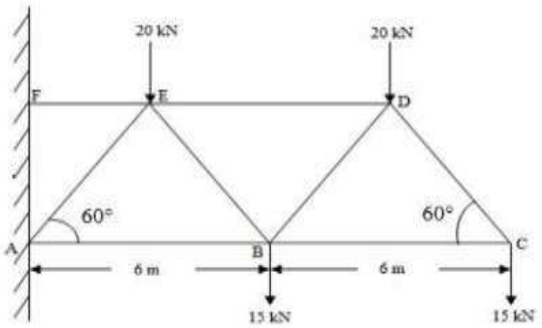

****